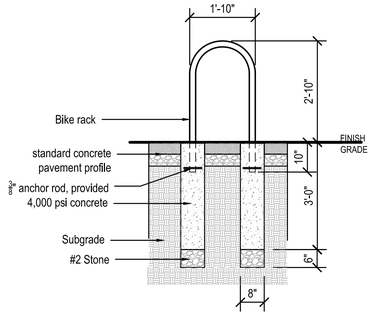

SECTION: EMBEDDED

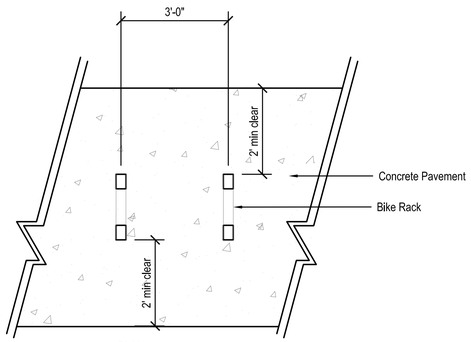

PLAN

13 BIKE RACK
Scale: 1/2" = 1'-0"

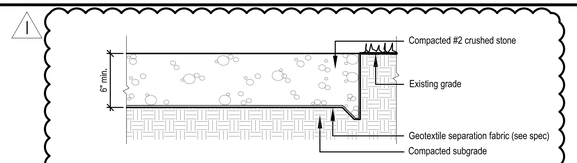

11 GRAVEL DRIVE
Not to Scale

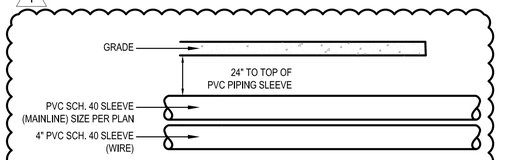

10 SLEEVE DETAIL
Scale: 1" = 1'-0"

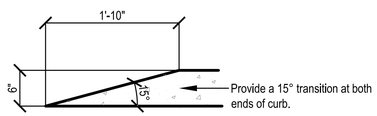

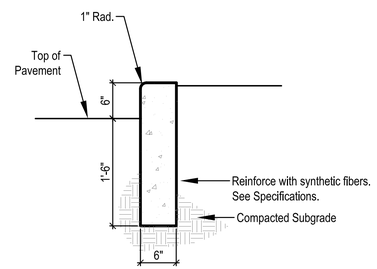

9 CONCRETE POST CURB
Scale: 1"=1'-0"

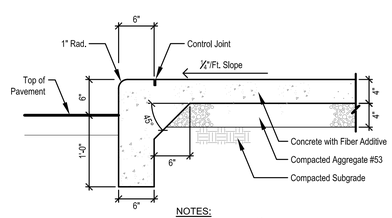

NOTES:
1. Curb shall have 1/2" expansion joints at 40'-0" max, control joints at 8'-0" max. unless otherwise noted.
2. Control joints shall be cut 1/4" depth of total thickness of slab.
3. Fiber additive: Virgin nylon fibers, 3/4" length. Nycon by Nycon Inc., or Forta Nylon by Forta Corporation, added at the batch plant at 1 lb. per cu. yd. of concrete.

8 INTEGRAL CONCRETE CURB & WALK
Scale: 1"=1'-0"

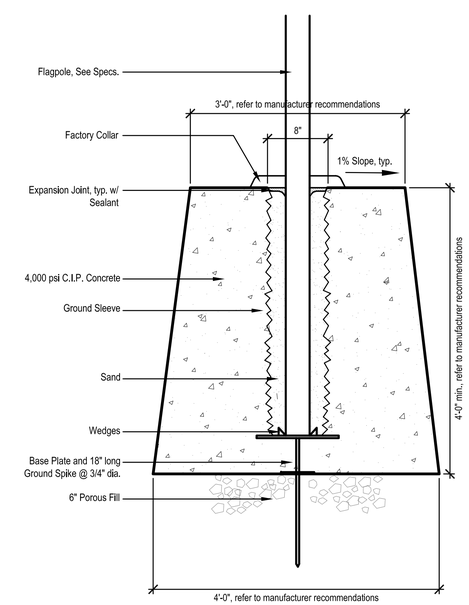

12 FLAGPOLE FOOTING
Scale: 1" = 1'-0"

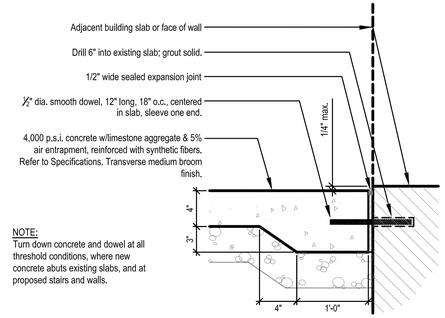

NOTE:
Turn down concrete and dowel at all threshold conditions, where new concrete abuts existing slabs, and at proposed stairs and walls.

7 DOWELS IN CONCRETE @ THRESHOLD
Scale: 1"=1'-0"

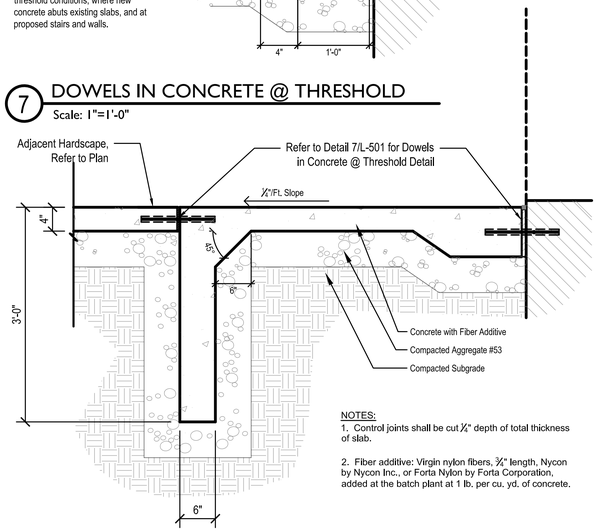

NOTES:
1. Control joints shall be cut 1/4" depth of total thickness of slab.
2. Fiber additive: Virgin nylon fibers, 3/4" length, Nycon by Nycon Inc., or Forta Nylon by Forta Corporation, added at the batch plant at 1 lb. per cu. yd. of concrete.

6 PAVEMENT AT BUILDING THRESHOLD
Scale: 1" = 1'-0"

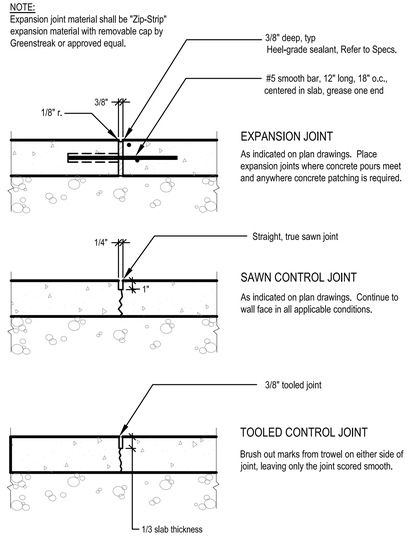

5 CONCRETE JOINTING
Not to Scale

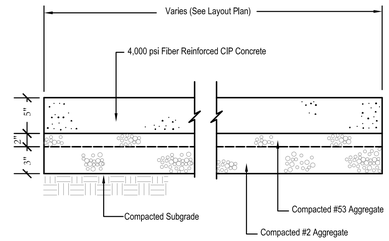

4 HEAVY DUTY CONCRETE
Not to Scale

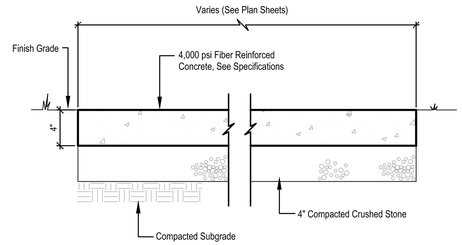

NOTES:
1. Control joints, expansion joints and edges of sidewalks indicated as hand-tooled shall be dressed after each finishing operation.
2. Provide expansion joints at intersection with another sidewalk, beween walks and building slabs, and at other points as indicated on the drawings.
3. Refer to plan drawings for locations of control and expansion joints.

3 CONCRETE PAVEMENT
Not to scale

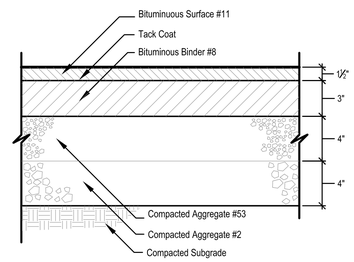

2 HEAVY-DUTY ASPHALT PAVEMENT
Not to Scale

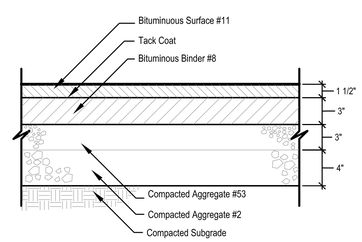

1 ASPHALT PAVEMENT (Parking and Drives)
Not to Scale

context DESIGN
12 S Main St. Ste 200 | Fortville, IN 46040
317-485-6900 | www.context-design.com

Consultant:

Certified by:

FREDDIE J. PRAZEAK
REGISTERED No. 20200052 STATE OF INDIANA LANDSCAPE ARCHITECT

EXPIRES 12/31/2017

Submittal Drawings
HSE New Elementary #13
HSE School Corporation
12500 Cyntheanne Road Fishers, Indiana

Sheet Title: Site Details

Revision	Date	Description
1	10/26/2017	Addendum 1

Date:	10.13.2017
Job No:	2017-1077
Drawn by:	BK / LM
Checked by:	FP

These Drawings and Specifications, and all copies thereof are and shall remain the property and copyright of the Landscape Architect. They shall be used only with respect to this Project and are not to be used on any other Project or Work without prior written permission from the Landscape Architect.

Sheet No:
L501